INFORMATION SHEET 3/8/16 TRUSTEES MEETING

ATTACHMENT 4.5

TO: Jim Bridges, Superintendent

FOR: Board of Trustees

FROM: Mindy Maxedon, CBO

ISSUE: RGM Associates Jefferson Change Order #'s 114 & 073r1

Traina Gymnasium Change Order #'s 039r1, 042, & 043

Change orders are reviewed weekly and if accepted by the district, are signed by Jim. Once the projects are complete, RGM will prepare a summary of all change orders and show the net effect.

Jefferson Change Orders:

COR #114:
To furnish and install FRP at concrete blocks walls at kitchen shown to receive paint per plan. Furnish and install light covers for down lights in kitchen hallway as required by the San Joaquin County Environmental Health Department. This change results in a charge of $5,137.00

COR #073-R1:
To remove interfering blocks and sheathing for fire sprinkler system at soffit of building A, and labor and materials to install fire sprinklers over exterior walkways originally shown to be installed in an open attic space. This change results in a charge of $5,673.00

The net charge from the Jefferson change order #'s listed above is $10,810.0

Please note that all change orders are affecting our contingency. No additional budget is required for these changes. Including the items above, the total net charge for all Jefferson change orders is +$484,750.00

Traina Gymnasium Change Orders:

COR #039-R1:
To install two additional intrusion alarm devices to the leaf of the two smoke hatches. This change results in a charge of $2,830.00

COR #042:
For the installation of Mondo/Koster system and VCT at interior ramp. This change results in a charge of $2,004.00

COR #043:
For the installation of metal cabinet to house smoke hatch cable pulls per instruction bulletin #4. This change results in a charge of $742.00

The net change from the Traina change order #'s listed above is + $5,576.00

Please note that all change orders are affecting our contingency. No additional budget is required for this change. Including the items above, the total net charge for all Traina change orders are +$79,095.00.

letter

DATE: 02/16/2016

TO: Jefferson School District
1219 Whispering Wind Dr.
Tracy, CA 95377

ATTN: James Bridges

RE: Jefferson School Replacement
DSA Appl. #: 02-113192
COR #073r1

Dear James,

We have reviewed the contractor's pricing on COR #073r1 to remove interfering blocks and sheathing for fire sprinkler system at soffit of building A, and labor and materials to install fire sprinklers over exterior walkways originally shown to be installed in an open attic space.

We find the pricing of $5,673.00 acceptable and recommend Board of Trustee acceptance.

District Authorization: _____
James W. Bridges

Date: 2/23/16

Thank you.

FROM: Thomas Kruse, Architect
pjhm architects
Principal

CC: Ramon Parocua, RGM
Kenneth Podany, PJHM
Paulina Saucedo, PJHM
File 13

pjhm·architects
OC 24461 Ridge Route Drive #100 • Laguna Hills CA 92653 P 949-496-6191
SD 804 Pier View Way #103 • Oceanside CA 92054 P 760-730-5527
PJHM.COM

CHANGE ORDER REQUEST 073r1

Distribution to:
- OWNER ☐
- ARCHITECT ☐
- CONST. MANAGER ☐
- CONTRACTOR ☐
- FIELD ☐
- OTHER ☐

PROJECT: Jefferson Replacement Project
7500 West Linne Road
Tracy, CA 95377

TO: Nick Morrissey, PJHM Architects

Reference: RFI # 239 PCO # _____ ASI# _____
CCA # _____ CCD # ____ IB# ____

COR NUMBER: 073r1

DATE: June 3, 2015

PROJECT No.: JES-14-01

CONTRACT FOR: School Replacement

CONTRACT DATE: June 12, 2014

Description of work:
Remove interfering blocks and sheathing required for the fire sprinkler system at the soffit at building A and additional labor and materials to install fire sprinklers over the exterior walkways originally shown to be installed in an open attic space.

1. Subcontractor Work (mark-up not to exceed 10%)
(Please attached all required backup, quantities, unit cost, etc., associated with work performed.)

1. Costs from Blades	$	1,386.00		
2. Costs from Pinasco Mechanical	$	3,963.16		
SUBTOTAL	$	5,349.16		
Contractor mark-up on Sub work (not to exceed 5%)	$	267.46		
		TOTAL - 1	$	5,616.62

2. Work Performed by Prime Contractor
(Please attached all required backup, quantities, unit cost, etc., associated with work performed.)

1. Material				
2. Labor				
3. Equipment	$	-		
SUBTOTAL	$	-		
Prime Contractor OH&P (not to exceed 15%)	$	-		
		TOTAL - 2	$	-
		TOTAL - 1 & 2	$	5,616.62
Bond Premium (actual rate, 1%)			$	56.17
		TOTAL PROPOSED CHANGE	$	5,673.00

Extension of Contract Time Proposed 0 Days.

Prepared by:

Ramon Parocua Date June 3, 2015

Proposed Change Order #18

OWNER INFORMATION

Name	RGM & Associates
Address	3230 Monument Way
City, State ZIP	Concord, CA 94518
Phone	(925) 671-7717
Project name	Jefferson School Replacement

CONTRACTOR INFORMATION

Company	Blades General Contracting
Name	Jason Blades
Address	1925 S. Faith Home Rd
City, State ZIP	Turlock, CA 95380
Phone	(209) 678-3952
Completion date	TBD

SCOPE OF WORK Fire Sprinklers

	Extra	Credit
Material	$0.00	
Labor	$1,260 00	
Equipment	$0.00	
Subtotal	$1,260.00	
Overhead (10%)	$126.00	
Total	$1,386 00	
Time	22	

Cindi Elliott
Submitted by (Company Representative)

6/3/15
Date

OWNER ACCEPTANCE

Submitted by (authorized representative)

Date

COST SUMMARY

LIST OF MATERIALS AND COSTS

Qty.	Description	Cost		Total
	Material			
			Subtotal-taxable	
14	Man hours	$90 00		$1,260 00
			Subtotal	$1,260 00
			Tax rate	7.38%
			Tax	**$0.00**
			Grand total	**$1,260.00**
				$1,260.00

PINASCO
MECHANICAL CONTRACTOR
PO Box 55287
Stockton, Ca 95205

FIRE PROTECTION DIVISION
PH. (209) 463-7793 CALIF. CONTR. LIC. NO. 429901 FAX (209) 463-3224

RFI 239 / Cost Breakdown / Showing additional Labor & Material
***Showing actual time installation took to complete**
****Estimated time for Original installation per FP2.1**

****5-29-15 / *5-27-2015 / 4-9-2015 / 1409RFI239CO4A**

RGM and Associates
3230 Monument Way
Concord, Ca., 94518
Ph. (925) 671-7717 / Fax (925) 671-7788

attn: **Jaime Ferranti** / Jamie@rgmassociates.com

PROJECT: **Jefferson School Replacement / Tracy Ca.,**

subj: **RFI #239**
re: **Automatic (wet) Fire Sprinkler system**
Bldg. B - South exterior covered walkway

PINASCO MECHANICAL CONTR. is pleased to provide the following as requested per RFI #239.
Due to piping on FP-2.1, shown to be in an open attic space (that does not exist) over exterior walkway (between grid lines "A" & "B", "3.6 & 4), the following additional material & labor will be required to install as directed.

***Actual installation as directed, involved offsetting 2" piping up the interior of the exterior South bldg. wall, up to the exterior walkway ceiling joist elevation (+16'-0) and traveling out through the walkway ceiling joist channel space, turning perpendicular due East towards the joist and thru the center of 28 overlapping roof rafters to the East end of canopy and dropping down to the lower lever East end canopy attic.**

FP2.1 shows piping traveling without any offsets from the interior of bldg. out to the South walkway canopy at the same elevation as the interior branch lines and continuing out to the lower East end canopy attic space.

****Time allocated for the original installation shown on Plan page FP2.1 for this area was 8.0 hr's****

Materials required:

1. 38: 2" Victaulic #009N groove coupling @ $ 10.40 ---------- $ 395.20
2. 21' of 2" S10 blk. Stl pipe @ $3.90 ---------- $ 81.90
3. 6: 2" Victaulic Groove Fire lock 90 degree ells @ $ 11.04 ---------- $ 66.24
4. 5: 1" plugs @ 2.64 ---------- $ 13.20

Total materials: ---------- $ 556.54

Material Credit: (for upright Fire Sprinkler heads that have been eliminated due to No Attic Space as originally shown)

1. 5; ½" Tyco TY3131 – Rough brass -200 degree- Upright Fire Sprikler heads @ $ 8.03 ---------- (-$ 40.15)

Additional Labor to install as directed:

	Estimated	*Actual time of installation
1. 30 locations; 2 x 10 ceiling joists and wall blocking to be drilled with a 4" hole x .3 hr. =	8 hr.'s	4-24 & 4-27-15; 12 hr.'s
2. 30 cuts (to existing 2" inch branch line piping) ; @ .20 hr.	6 hr.	4-28 ---------- 8 hr.'s
3. 60 grooves (to 2" cut sections of branch line) @ .25	15 hr.	4-29 & 4-30 ---------- 16 hr.'s
4. 20 additional coupling connections to assemble @ .15	3 hr.	5-1-15 ---------- 8 hr.'s
		*Actual time to install 44.0 hr.'s

Total (additional) Labor — 32 hr.'s @ 95.00 ---------- $ 3,040.00
Sales Tax (9% on taxable items) — $ 46.48
10% Overhead & Profit — $ 360.29

TOTAL (Add) — **$ 3,963.16**

REQUEST FOR INFORMATION

CONSTRUCTION MANAGERS

CONTRACTORS

BUILDERS

RFI #: 239

Description: Building A Fire Sprinklers

To: PJHM
Attention: Nick Morrissey

E-mail To: nick@pjhm.com

Project: Jefferson School Replacement
Jefferson School District

Subcontractor: Pinasco

Date Submitted: 2/19/15
Date Needed: 2/24/15

Urgent ☐
Specification:

Question:

Bldg. A

1.) Area between Grid "3.6" & Grid line "4", between Grid line "A" & "B", south exterior walkway coverage.

The attic above the exterior walkway has no room for piping to be installed as shown on project plan page "FP-2.1.

Please advise.

Possible Cost Impact ☐

Possible Time Impact ☐

Response:
Sprinkler pipes shall be installed as shown in plans. Refer to detail 4/S-5.5 for typical boring of joists.

Date Answered: 3/2/15

Additional Response Upright sprinklers at the front soffit at building A may be omitted as shown on attached sketch and code references Provide a credit for the removal of these heads

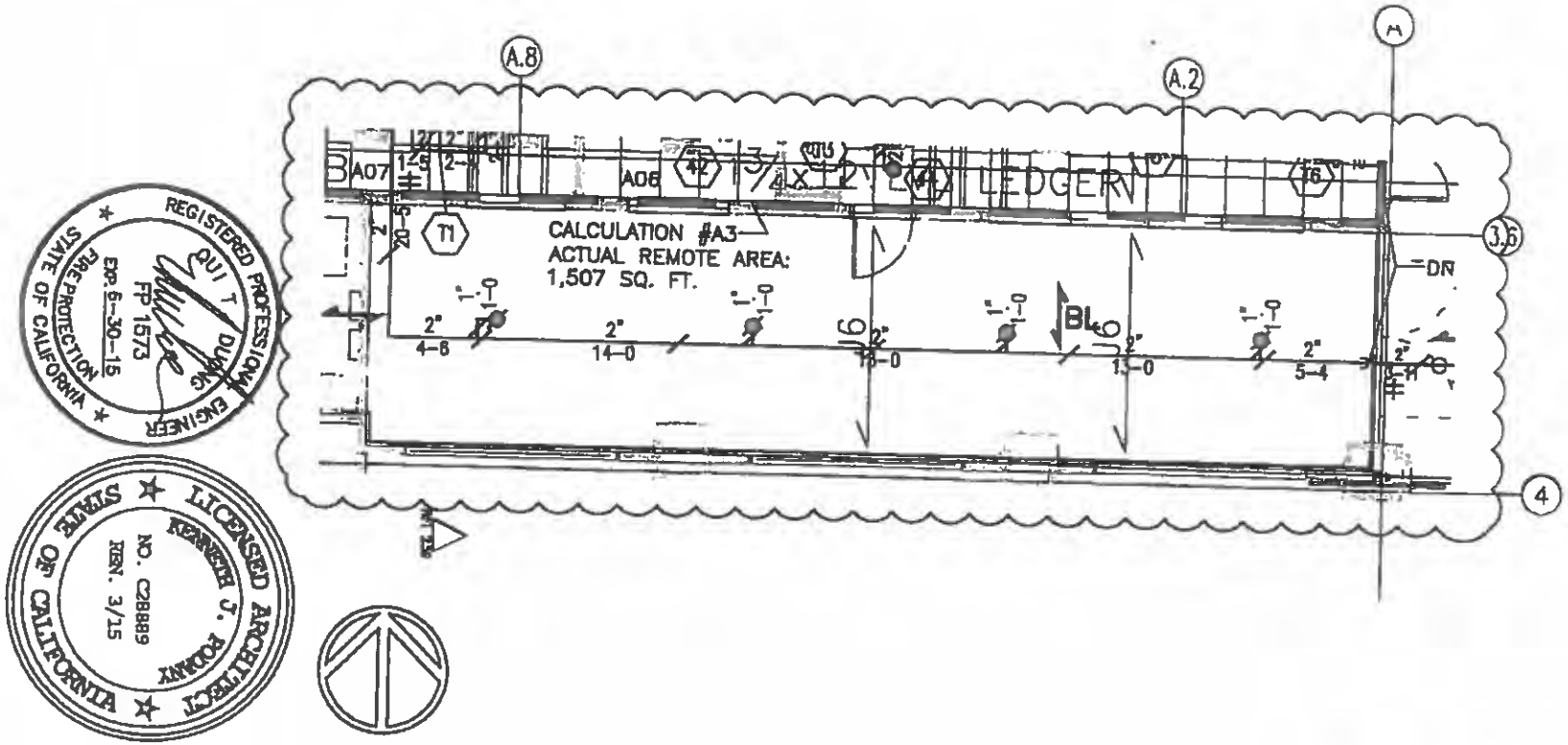

REGISTERED PROFESSIONAL ENGINEER
QUI T DUONG
FP 1573
EXP. 6-30-15
FIRE PROTECTION
STATE OF CALIFORNIA

LICENSED ARCHITECT
KENNETH J. POONAY
NO. C28889
REN. 3/15
STATE OF CALIFORNIA

SKFS-1

RFI 239

BUILDING "A"
FIRE SPRINKLER
PIPING PLAN

SCALE:1/8"=1'-0"

JEFFERSON SCHOOL REPLACEMENT
INCREMENT #1

JEFFERSON SCHOOL DISTRICT

pjhm architects

OC: 24461 Ridge Route Drive #110, Laguna Hills, CA 92653 • p: 949.496.6191 • SD: 804 Pier View Way #103, Oceanside, CA 92054 • p: 760.730.5527 • www.pjhm.com

letter

DATE: 02/16/2016

TO: Jefferson School District
1219 Whispering Wind Dr.
Tracy, CA 95377

ATTN: James Bridges

RE: Jefferson School Replacement
DSA Appl. #: 02-113192
COR #114

Dear James,

We have reviewed the contractor's pricing on COR #114 to furnish and install FRP at concrete block walls at kitchen shown to receive paint per plan. Furnish and install light covers for down lights in kitchen hallway as required by the San Joaquin County Environmental Health Department.

We find the pricing of $5,137.00 acceptable and recommend Board of Trustee acceptance.

District Authorization:

James W. Bridges

Date: 2/23/16

Thank you.

FROM: Thomas Kruse, Architect
pjhm architects
Principal

CC: Ramon Parocua, RGM
Kenneth Podany, PJHM
Paulina Saucedo, PJHM
File 13

pjhm·architects
OC 24461 Ridge Route Drive #100 • Laguna Hills CA 92653 P 949-496-6191
SD 804 Pier View Way #103 • Oceanside CA 92054 P 760-730-5527

CHANGE ORDER REQUEST 114

Distribution to:
OWNER ☐
ARCHITECT ☐
CONST. MANAGER ☐
CONTRACTOR ☐
FIELD ☐
OTHER ☐

PROJECT: Jefferson Replacement Project
7500 West Linne Road
Tracy, CA 95377

TO: Nick Morrissey, PJHM Architects

Reference: RFI # ____ PCO # ____ ASI# ____
CCA # ____ CCD # ____ IB# ____

COR NUMBER: 114

DATE: January 12, 2016

PROJECT No.: JES-14-01

CONTRACT FOR: School Replacement

CONTRACT DATE: June 12, 2014

Description of work:
Furnish and install FRP at concrete block walls at the kitchen shown to only receive paint per plan, and furnish and install light covers for down lights in the kitchen hallway per San Joaquin County Environmental Health Department.

1. Subcontractor Work (mark-up not to exceed 10%)
(Please attached all required backup, quantities, unit cost, etc., associated with work performed.)

1. FRP Installation Costs from RG Construction	$	1,500.00		
2. Costs for Light Fixture Lenses from Patrias	$	696.83		
	$	-		
SUBTOTAL	$	2,196.83		
Contractor mark-up on Sub work (not to exceed 5%)	$	109.84		
		TOTAL - 1	$	2,306.67

2. Work Performed by Prime Contractor
(Please attached all required backup, quantities, unit cost, etc., associated with work performed.)

1. Material costs from M&M Materials	$	2,416.56		
2. Supervision				
3. Equipment	$	-		
SUBTOTAL	$	2,416.56		
Prime Contractor OH&P (not to exceed 15%)	$	362.48		
		TOTAL - 2	$	2,779.04
		TOTAL - 1 & 2	$	5,085.72
Bond Premium (actual rate, 1%)			$	50.86
		TOTAL PROPOSED CHANGE	$	5,137.00

Extension of Contract Time Proposed 0 Days.

Prepared by:

Ramon Parocua Date January 12, 2016

M&M Materials
1020 Winding Creek Rd, Ste 130
Roseville, CA 95678
916-787-0639

Invoice

Date	Invoice #
12/22/2015	4694

Bill To	Ship To
Cash Accounts RGM & Associates	Job: Jefferson School Replacement Will Call Our Shop

P.O. Num...	Terms	Ship	Via	F.O.B.	Project
	Due on receipt	12/22/2015			

Quantity	Item Code	Description	Price Each	Amount
21	F10FR	4x10 Class A Fire-X P100 White Textured FRP	79.38	1,666.98T
18	VD10	10' PVC Divider White	2.70	48.60T
35	VC10	10' PVC Cap White	2.04	71.40T
3	VI10	10' PVC Inside Corner White	3.66	10.98T
3	Titebond 4...	Titebond Advanced Polymer Glue	150.00	450.00T
		Paid by Visa		

Adjust Phone Order

VISA
[illegible]5835
Entry Method: Manual
Approval Online Batch#: [illegible]
12/22/15 11:35:20
[illegible]
Trx#: 00000002 Appr Code: [illegible]

Amount: $ 2,416.56
Tax: $ 168.60
Total: $ 2,416.56

IMPORTANT!
RED BEFORE FABRICATING. ABSOLUTELY NO RETURNS
CUT OR DAMAGED MATERIALS.
JECT TO A MINIMUM 15% RESTOCKING FEE.

Subtotal	$2,247.96
Sales Tax	$168.60
Total	$2,416.56

RG CONSTRUCTION

477 W 20TH STREET
TRACY, CA 95376

Invoice

Date	Invoice #
1/6/2016	1142

Bill To
RGM and Associates 3230 Monument Way Concord, CA 94518 Job:JES-501 Jefferson School (Tracy)

Description	Amount
Install Class A Marlite (furnished by the Contractor) full Height on 3 walls in Kitchen for a total of...	1,500.00
It's been a pleasure working with you!	**Total** $1,500.00

DARRALE PATRIAS
ELECTRICAL CONTRACTOR, INC.

2480 N. Walnut Rd. / P.O. Box 1832
Turlock, Ca 95381
(209) 632-6196 Fax (209) 632-4542
Lic No. 346403

December 21, 2015

RGM & Associates
3230 Monument Way
Concord, CA 94518
Attn: Ramon

Re: Jefferson School Replacement

PCO #29 Add (10) 4G fresnel lenses to kitchen down lights. Note: The lead time on these lenses is 4-6 weeks.

Materials	353.30
Sales tax	28.26
Labor: 3 hours	
@ $81.47/hr	244.41
Overhead & profit	62.60
Bond cost:	8.26
Total cost:	$696.83

QUOTE # CJ1221153 DATE: 12-21-15 PAGE 1

Consolidated Electrical Distributors
1343 N. Emerald Avenue
Modesto, CA 95352
Phone: (209)524-5591
Fax: (209)524-4644

To: MICHELE NEUHUYS
DARRALE PATRIAS ELECTRICAL
2480 N. WALNUT ROAD
PO BOX 1832
TURLOCK, CA 95381
(209) 632-6196 Fax (209) 632-4542

Proj: JEFFERSON TYPE 4B LENS

Arch:
Engr:
Spec:
Cont:
Remarks:

Qty	Type	Mfg	Description	Unit Price	Extd.Price
10	4B	HALO	GL77PK	35.33	$353.30
			(4G) FRESNEL GLASS		
			PLUS FREIGHT		
			LEAD TIME 4-6 WEEKS		
			Total ====		$353.30

F.O.B. Per MFG | Terms: Net 30 Days | Lead time:

Prices firm for entry by: 10 Days | Shipment by: 30 Days

Subject to manufacturer's published terms and conditions of sale.
Quotation is void if changed. Complete quote must be used.

Printed 12/21/15 12:41:18 Per: CATHY JONES

Time In: 9:40 am
Time Out: 10:40 am

San Joaquin County
Environmental Health Department

1868 East Hazelton Avenue, Stockton, CA 95205-6232
Telephone: (209) 468-3420 *Fax:* (209) 464-0138 *Web:* www.sjgov.org/ehd

Food Program Service Request Inspection Report

Name of Facility: JEFFERSON ESD-JEFFERSON SCHOOL	Date: 12/18/2015
Address: 7500 LINNE RD , TRACY 95376	
Requestor: NICHOLAS MORRISSEY, PJHM ARCHITECTS	Telephone: (949) 496-6191
Program Element: 1601 - FOOD PLAN CHECK	Request #: SR0068814
Inspection Type: 523 - PLAN CHECK (3 hr minimum)	

VIOLATIONS AND CORRECTIVE ACTIONS

Items listed on this report as violations do not meet the requirements set forth in the California Health and Safety Code commencing with section 7; 113700. All violations must be corrected within specified timeframe. *Violations that are classified as "MAJOR" pose an immediate threat to public health and have the potential to cause foodborne illness. All major violations must be corrected immediately. Non-compliance may warrant immediate closure of the food facility.*

#1 Demonstration of Knowledge

OBSERVATIONS: Provide food manager certificate in 60 days of opening.

CALCODE DESCRIPTION: All food employees shall have adequate knowledge of and be trained in food safety as it relates to their assigned duties. (113947) Food facilities that prepare, handle or serve non-prepackaged potentially hazardous food, shall have an employee who has passed an approved food safety certification examination. (113947-113947.1) Any food handler hired after June 1, 2011 shall obtain a Food Handler Card within 30 days (113948).

#6 Handwashing Facilities Supplied and Accessible

OBSERVATIONS: Provide soap and paper towels at all hand sinks.

CALCODE DESCRIPTION: Handwashing soap and towels or drying device shall be provided in dispensers dispensers shall be maintained in good repair. (113953.2) Adequate facilities shall be provided for hand washing, food preparation and the washing of utensils and equipment. (113953, 113953.1, 114067(f))

#7 Hot and Cold Holding Temperatures

OBSERVATIONS: Milk cooler not turned on. Maintain refrigerator at or below 41F.

CALCODE DESCRIPTION: Potentially hazardous foods shall be held at or below 41/ 45°F or at or above 135°F. (113996, 113998, 114037, 114343(a))

#14 Food Contact Surfaces Sanitized or Warewashing Sanitization

OBSERVATIONS: Provide dishwasher sanitizer at 50ppm chlorine.

CALCODE DESCRIPTION: All food contact surfaces of utensils and equipment shall be clean and sanitized. (113984(e), 114097, 114099.1, 114099.4, 114099.6, 114101 (b-d), 114105, 114109, 114111, 114113, 114115 (a, b, d), 114117, 114125(b), 114135, 114141)

San Joaquin County
Environmental Health Department
1868 East Hazelton Avenue, Stockton, CA95205-6232
Telephone: (209) 468-3420 *Fax:* (209) 464-0138 *Web:* www.sjgov.org/ehd

Food Program Service Request Inspection Report

Facility Name and Address: JEFFERSON ESD-JEFFERSON SCHOOL, 7500 LINNE RD , TRACY 95376

#21 Hot and Cold Potable Water Not Available

OBSERVATIONS: Hot water in facility is 119F Maintain at or above 120F

Middle hand sink is turned off Keep all hand sinks at or above 100F

CALCODE DESCRIPTION: An adequate, protected, pressurized, potable supply of hot water and cold water shall be provided at all times. (113953(c), 114099.2(b) 114101(a), 114189, 114192, 114192.1, 114195)

#38 Approved / Sufficient Ventilation and Lighting

OBSERVATIONS: Provide light covers for lights in hallway

Provide lights for hood and walk-ins

CALCODE DESCRIPTION: Exhaust hoods shall be provided to remove toxic gases, heat, grease, vapors and smoke and be approved by the local building department. Canopy-type hoods shall extend 6" beyond all cooking equipment. All areas shall have sufficient ventilation to facilitate proper food storage. Toilet rooms shall be vented to the outside air by a screened openable window, an air shaft, or a light-switch activated exhaust fan, consistent with local building codes. (114149, 114149.1) Adequate lighting shall be provided in all areas to facilitate cleaning and inspection. Light fixtures in areas where open food is stored, served, prepared, and where utensils are washed shall be of shatterproof construction or protected with light shields. (114149.2, 114149.3, 114252, 114252.1)

#43 Toilet Facilites Clean/ Supplied/ Maintained

OBSERVATIONS: Provide self closing door for restroom.

CALCODE DESCRIPTION: Toilet facilities shall be maintained clean, sanitary and in good repair. Toilet rooms shall be separated by a well-fitting self-closing door. Toilet tissue shall be provided in a permanently installed dispenser at each toilet. The number of toilet facilities shall be in accordance with local building and plumbing ordinances. Toilet facilities shall be provided for patrons: in establishments with more than 20,000 sq ft. establishments offering on-site liquor consumption. (114250, 114250.1, 114276)

#45 Floors, Walls, Ceilings; Clean and Maintained

OBSERVATIONS: Clean facility throughout.

Concrete walls are porous in kitchen. Paint with a thick (marine grade) paint to make a smooth, cleanable and non porous surface or FRP.

CALCODE DESCRIPTION: The walls / ceilings shall have durable, smooth, nonabsorbent, light-colored, and washable surfaces. All floor surfaces, other than the customer service areas, shall be approved, smooth, durable and made of nonabsorbent material that is easily cleanable. Approved base coving shall be provided in all areas, except customer service areas and where food is stored in original unopened containers. Food facilities shall be fully enclosed. All food facilities shall be kept clean and in good repair. (114143 (d), 114266, 114268, 114268.1, 114271, 114272)

OVERALL INSPECTION NOTES AND COMMENTS

San Joaquin County
Environmental Health Department

1868 East Hazelton Avenue, Stockton, CA95205-6232
Telephone: (209) 468-3420 *Fax:* (209) 464-0138 *Web:* www.sjgov.org/ehd

Food Program Service Request Inspection Report

Facility Name and Address: JEFFERSON ESD-JEFFERSON SCHOOL, 7500 LINNE RD , TRACY 95376

OBSERVATIONS

Name on Food Safety Certificate _____ **Expiration Date:** _____

Warewash Chlorine (Cl): ____ ppm Heat: ____ ° F **Water/Hot Water** Ware Sink Temp 119 ° F

Quaternary Ammonia (QA): ____ ppm Hand Sink Temp 108 ° F

FOOD ITEM -- LOCATION -- TEMP ° F -- COMMENTS

Walk-in -- 41 00° F

NOTES

Re-inspection scheduled for Tue 1pm.

*Door in kitchen at serving location must be kept closed or a fly fan must be installed.

The person in charge is responsible for ensuring that the above mentioned facility is in compliance with all applicable sections of the California Health and Safety Code. If a reinspection is required, fees will be assessed at the current hourly rate.

Received by: _____ Name and Title: _____

EH Specialist: MELISSA NISSIM Phone: (209) 468-3168

letter

DATE: 02/08/2016

TO: Jefferson School District
1219 Whispering Wind Dr.
Tracy, CA 95377

ATTN: James Bridges

RE: Anthony Traina Gym and Performance Center
DSA Appl. #: 02-113192
COR #039r1

Dear James,

We have reviewed the contractor's pricing on COR #039r1 to install two additional intrusion alarm devices to the leaf of the two smoke hatches

We find the pricing of $2,830.00 acceptable and recommend Board of Trustee acceptance.

District Authorization: _____
James W. Bridges

Date: 2/9/2016

Thank you.

FROM: Thomas Kruse, Architect
pjhm architects
Principal

CC: Ramon Parocua, RGM
Anthony Continente, RGM
Kenneth Podany, PJHM
File 13

pjhm·architects
OC 24461 Ridge Route Drive #100 • Laguna Hills CA 92653 P 949-496-6191
SD 804 Pier View Way #103 • Oceanside CA 92054 P 760-730-5527

CHANGE ORDER REQUEST 039r1

Distribution to:
OWNER ☐
ARCHITECT ☐
CONST. MANAGER ☐
CONTRACTOR ☐
FIELD ☐
OTHER ☐

PROJECT: Anthony Traina Gym and Performance Center
4256 Windsong Drive
Tracy, CA 95377

TO: Nick Morrissey, PJHM Architects

Reference: RFI # ____ PCO # _____ ASI# _____

CCA # _____ CCD # _____ IB# _____

COR NUMBER: 039r1

DATE: January 15, 2016

PROJECT No.: JES-14-01

CONTRACT FOR: New Gymnasium

CONTRACT DATE: November 1, 2014

Description of work:
Install two (2) additional intrusion alarm devices to the leaf of the two (2) smoke hatches.

1. Subcontractor Work (mark-up not to exceed 10%)
(Please attached all required backup, quantities, unit cost, etc., associated with work performed.)

1. Costs from Darrale Patrias	$ 2,666.81		
SUBTOTAL	$ 2,666.81		
Contractor mark-up on Sub work (not to exceed 5%)	$ 133.34		
	TOTAL - 1	$	2,800.15

2. Work Performed by Prime Contractor
(Please attached all required backup, quantities, unit cost, etc., associated with work performed.)

Materials	$ -		
Labor	$ -		
Equipment	$ -		
SUBTOTAL	$ -		
Prime Contractor OH&P (not to exceed 15%)	$ -		
	TOTAL - 2	$	-
	TOTAL - 1 & 2	$	2,800.15
Bond Premium (actual rate, 1.06%)		$	29.68
TOTAL PROPOSED CHANGE		$	**2,830.00**

Extension of Contract Time Proposed 1 Days.

Prepared by:
Jeffrey J. Gilchrist

Date January 15, 2016

DARRALE PATRIAS
ELECTRICAL CONTRACTOR, INC.

2480 N. Walnut Rd. / P.O. Box 1832
Turlock, Ca 95381
(209) 632-6196 Fax (209) 632-4542
Lic No. 348403

January 15, 2016

RGM & Associates
3230 Monument Way
Concord, CA 94518
Attn: Ramon

Re: Anthony Traina Gym-PCO 009

Add (2) roof hatch door contacts & associated monitor modules.

Quality Sound	2,539.82
Overhead & profit	126.99
Total cost:	$2,666.81

QUALITYSOUND
SYSTEMS INTEGRATION
DIVISION OF SI-JAMAR, INC.

NECA-IBEW Signatory Contractor Since 1989

Change Order

Date	1/14/16	QS Job #	14125E-601
Company	Darrale Patrias Electric		
Address	P.O. Box 1832		
City	Turlock, CA	Zip	95381
Phone	209-632-6196	Email	michele@patriaselectric.com
Contact	Michele Neuhuys	Ref/PO	
Project	Anthony Traina ES Gym and Performing Arts Building		
Notes	This change order represents the cost associated with adding (2) roof hatch door contacts and associated monitor modules.		

Parts	Qty	Mfg.	Model	Description	Each	Extended
	2	Bosch	ISN-CMET-200AR	Metal Surface Door Contact	$ 9.49	$ 18.98
	2	Bosch	D9127U	Popit Module	$ 28.85	$ 57.70
	0.5	Wpenn	244	Interior Cable	$ 268.34	$ 134.17
					$ -	$ -
					$ -	$ -
					$ -	$ -
					$ -	$ -
					$ -	$ -
					$ -	$ -
					$ -	$ -
					$ -	$ -
					$ -	$ -
					$ -	$ -
					$ -	$ -
					$ -	$ -
					$ -	$ -
					$ -	$ -
					$ -	$ -

1-DAY	Freight	$ 150.00
	Material	$ 210.84
9.000%	Tax	$ 18.98
	Labor	$ 2,160.00
	Engineering	$ -
	Miscellaneous	$ -
	Total:	$ 2,539.82

Please note that the above pricing is good for 30 days.

Sincerely,

John Greff

Sales Executive
jgreff@qualitysound.net

Approved: _____ *Date:* _____

PO Box 5501
2010 E. Fremont Street, Stockton, CA 95205
Ph. (209)946-2104 Fax (209)946-0965

letter

DATE: 02/16/2016

TO: Jefferson School District
1219 Whispering Wind Dr.
Tracy, CA 95377

ATTN: James Bridges

RE: Anthony Traina Gym and Performance Center
DSA Appl. #: 02-113192
COR #042

Dear James,

We have reviewed the contractor's pricing on COR #042 for the installation of Mondo/Koster system and VCT at interior ramp.

We find the pricing of $2,004.00 acceptable and recommend Board of Trustee acceptance.

District Authorization: _____
James W. Bridges

Date: 2/23/16

Thank you.

FROM: Thomas Kruse, Architect
pjhm architects
Principal

CC: Ramon Parocua, RGM
Anthony Continente, RGM
Kenneth Podany, PJHM
File 13

pjhm·architects
OC: 24461 Ridge Route Drive #100 • Laguna Hills CA 92653 P: 949-496-6191
SD: 804 Pier View Way #103 • Oceanside CA 92054 P: 760-730-5527

CHANGE ORDER REQUEST 042

Distribution to:
- OWNER ☐
- ARCHITECT ☐
- CONST. MANAGER ☐
- CONTRACTOR ☐
- FIELD ☐
- OTHER ☐

PROJECT: Anthony Traina Gym and Performance Center
4256 Windsong Drive
Tracy, CA 95377

TO: Nick Morrissey, PJHM Architects

Reference: RFI # _____ PCO # _____ ASI# _____
CCA # _____ CCD # _____ IB# _____

COR NUMBER: 042

DATE: February 12, 2016

PROJECT No.: JES-14-01

CONTRACT FOR: New Gymnasium

CONTRACT DATE: November 1, 2014

Description of work:
Installation of Mondo/Koster system and VCT and interior ramp. Plans do not show the actual placement or amount of materials at this location.

1. Subcontractor Work (mark-up not to exceed 10%)
(Please attached all required backup, quantities, unit cost, etc., associated with work performed.)

1. Costs from All County Flooring	$ 1,888.33	
SUBTOTAL	$ 1,888.33	
Contractor mark-up on Sub work (not to exceed 5%)	$ 94.42	
TOTAL - 1		$ 1,982.75

2. Work Performed by Prime Contractor
(Please attached all required backup, quantities, unit cost, etc., associated with work performed.)

Materials	$ -	
Labor	$ -	
Equipment	$ -	
SUBTOTAL	$ -	
Prime Contractor OH&P (not to exceed 15%)	$ -	
TOTAL - 2		$ -
TOTAL - 1 & 2		$ 1,982.75
Bond Premium (actual rate, 1.06%)		$ 21.02
TOTAL PROPOSED CHANGE		$ 2,004.00

Extension of Contract Time Proposed 1 Days.

Prepared by:
Jeffrey J. Gilchrist

Date February 12, 2016

CHANGE ORDER QUOTE

ALL COUNTY FLOORING
3140 Park Rd Suite #D
Benicia Ca, 94510
Tel: (707) 205-4229
Fax: (866) 321-2909
CA Contractor Lic. #988380

COQ # 14.1124.1.1.R1

TO: RGM and Associates
3230 Monument Way
Concord Ca. 94518

ATTENTION: Jeff Gilchrist

DATE: February 2, 2016
PROJECT: **Anthony Traina Gymnasium**
ARCHITECT: **PJHM Architects**
REFERENCE: Add Mondo on Ramp & VCT on Landing

DESCRIPTION OF COST IMPACT

Furnish and install Mondo Advanced 8mm Color: L92 Dark Maple on Ramp from Gym floor to landing at stage and Armstrong Imperial Texture Color: 51910 Classic Black on Landing

QUANTITY	UNIT	DESCRIPTION	UNIT PRICE	EXTENSION
199	sf	Mondo Material	$ 8.19	$ 1,629.81
1	ctn	VCT Material	$ 49.99	$ 49.99
				$ -

SUBTOTAL	$ 1,679.80
FREIGHT	
SALES TAX RATE	8.50%
SALES TAX	$ 138.53
MKUP	$ 69.99
TOTAL COST IMPACT	$ 1,888.33

SUBMITTED BY Terry Carroll

ACCEPTED BY *RGM and Associates*
COMPANY NAME

AUTHORIZED SIGNATURE DATE

PRINT NAME TITLE

letter

DATE: 02/22/2016

TO: Jefferson School District
1219 Whispering Wind Dr.
Tracy, CA 95377

ATTN: James Bridges

RE: Anthony Traina Gym and Performance Center
DSA Appl. #: 02-113192
COR #043

Dear James,

We have reviewed the contractor's pricing on COR #043 for the installation of metal cabinet to house smoke hatch cable pulls per Instruction Bulletin #4.

We find the pricing of $742.00 acceptable and recommend Board of Trustee acceptance.

District Authorization: _____
James W. Bridges

Date: 2/23/16

Thank you.

FROM: Thomas Kruse, Architect
pjhm architects
Principal

CC: Ramon Parocua, RGM
Anthony Continente, RGM
Kenneth Podany, PJHM
File 13

pjhm·architects
OC 24461 Ridge Route Drive #100 • Laguna Hills CA 92653 P 949-496-6191
SD 804 Pier View Way #103 • Oceanside CA 92054 P 760-730-5527

CHANGE ORDER REQUEST 043

Distribution to:
OWNER ☐
ARCHITECT ☐
CONST. MANAGER ☐
CONTRACTOR ☐
FIELD ☐
OTHER ☐

PROJECT: Anthony Traina Gym and Performance Center
4256 Windsong Drive
Tracy, CA 95377

TO: Nick Morrissey, PJHM Architects

Reference: RFI # ____ PCO # _____ ASI# _____
CCA # _____ CCD # _____ IB# __4___

COR NUMBER: 043

DATE: February 22, 2016

PROJECT No.: JES-14-01

CONTRACT FOR: New Gymnasium

CONTRACT DATE: November 1, 2014

Description of work:
Installation of Metal Cabinet to house smoke hatch cable pulls per IB #4.

1. Subcontractor Work (mark-up not to exceed 10%)
(Please attached all required backup, quantities, unit cost, etc., associated with work performed.)

1. Costs from Patrias Electrical	$ 698.83	
SUBTOTAL	$ 698.83	
Contractor mark-up on Sub work (not to exceed 5%)	$ 34.94	
TOTAL - 1		$ 733.77

2. Work Performed by Prime Contractor
(Please attached all required backup, quantities, unit cost, etc., associated with work performed.)

Materials	$ -	
Labor	$ -	
Equipment	$ -	
SUBTOTAL	$ -	
Prime Contractor OH&P (not to exceed 15%)	$ -	
TOTAL - 2		$ -
TOTAL - 1 & 2		$ 733.77
Bond Premium (actual rate, 1.06%)		$ 7.78
TOTAL PROPOSED CHANGE		**$ 742.00**

Extension of Contract Time Proposed 0 Days.

Prepared by:
Jeffrey J. Gilchrist

Date February 22, 2016

DARRALE PATRIAS
ELECTRICAL CONTRACTOR, INC.

2480 N. Walnut Rd. / P.O. Box 1832
Turlock, Ca 95381
(209) 632-6196 Fax (209) 632-4542
Lic No. 348403

February 19, 2016

RGM & Associates
3230 Monument Way
Concord, CA 94518
Attn: Ramon

Re: Anthony Traina Gym-PCO 010

IB #4

Materials	135.00
Sales tax	11.48
Labor: 6 hours	
@ $81.47/hr	488.82
Overhead & profit	63.53
Total cost:	$698.83

PRICING SHEET

CONTRACTOR RGM & Associates		ESTIMATE NO.	
NAME OF JOB Anthony Traina		DATE 2-19-16	SHEET NO.
LOCATION IB #4		ESTIMATED BY	PRICED BY

MATERIAL/UNIT	QUANTITY	MATERIAL PRICE	PER	MATERIAL EXTENSION	LABOR UNIT	PER	LABOR EXTENSION
Hoffman A-10N104 Encl	1			75.00			
3/8 x 3½ KB-TZ anchors	8	7.50	E	60.00			
				135.00			6.00

SEEGER'S PRINT SHOP 590.3

Small Type 1 Enclosures

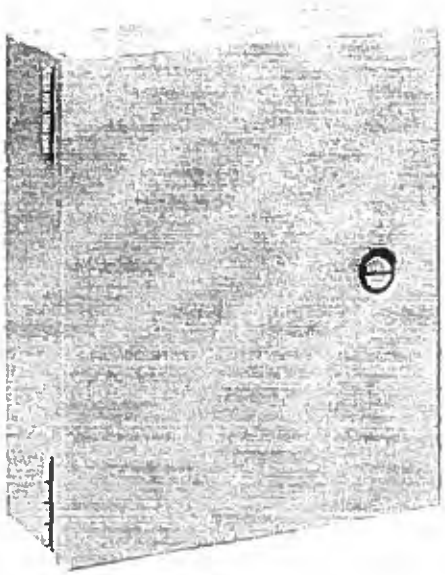

Construction

- 16 gauge steel
- Butt hinges
- Mounting holes on back of enclosure

Finish

ANSI 61 gray polyester powder paint finish inside and out over phosphatized surfaces. Optional solid panels are white and optional perforated panels are gray.

Industry Standards

UL 50, File No. E27567, Type 1
NEMA/EEMAC Type 1
CSA, File No. 42184, Type 1
IEC 60529, IP30

Accessories

See also Accessories chapter.

Cylinder Lock Kit (AL12AR)
Grounding Device
Padlock Kit(APLKJIC)
Panels
"T" Handle Latch Kit (AL7A)
Touch-Up Paint (ATPPY61)
Window Kit

Application

Designed for use in control and instrumentation applications in areas which do not require oiltight and dusttight specifications.

Features

- Flush slotted latch operated with a screwdriver. Optional latches available
- Weldnuts provided for mounting optional panels

Standard Sizes Small Type 1 Enclosures

Catalog Number	A x B x C in. (mm)	Panel Catalog Number	Perforated Panel Catalog Number	Panel Size D x E (in.)	Panel Size D x E (mm)
A6N64	6.00 x 6.00 x 4.00 (152 x 152 x 102)	A6N6P	A6N6PP	4.25 x 4.25	108 x 108
A8N64	8.00 x 6.00 x 4.00 (203 x 152 x 102)	A8N6P	A6N6PP	6.25 x 4.25	159 x 108
A8N84	8.00 x 8.00 x 4.00 (203 x 203 x 102)	A8N8P	A8N8PP	6.25 x 6.25	159 x 159
A10N84	10.00 x 8.00 x 4.00 (254 x 203 x 102)	A10N8P	A10N8PP	8.25 x 6.25	210 x 159
A10N104	10.00 x 10.00 x 4.00 (254 x 254 x 102)	A10N10P	A10N10PP	8.25 x 8.25	210 x 210
A12N104	12.00 x 10.00 x 4.00 (305 x 254 x 102)	A12N10P	A12N10PP	10.25 x 8.25	260 x 210
A12N124	12.00 x 12.00 x 4.00 (305 x 305 x 102)	A12N12P	A12N12PP	10.25 x 10.25	260 x 260
A14N124	14.00 x 12.00 x 4.00 (356 x 305 x 102)	A14N12P	A14N12PP	12.25 x 10.25	311 x 260
A8N66	8.00 x 6.00 x 6.00 (203 x 152 x 152)	A8N6P	A8N6PP	6.25 x 4.25	159 x 108
A8N86	8.00 x 8.00 x 6.00 (203 x 203 x 152)	A8N8P	A8N8PP	6.25 x 6.25	159 x 159
A10N86	10.00 x 8.00 x 6.00 (254 x 203 x 152)	A10N8P	A10N8PP	8.25 x 6.25	210 x 159
A10N106	10.00 x 10.00 x 6.00 (254 x 254 x 152)	A10N10P	A10N10PP	8.25 x 8.25	210 x 210
A12N106	12.00 x 10.00 x 6.00 (305 x 254 x 152)	A12N10P	A12N10PP	10.25 x 8.25	260 x 210
A12N126	12.00 x 12.00 x 6.00 (305 x 305 x 152)	A12N12P	A12N12PP	10.25 x 10.25	260 x 260
A14N126	14.00 x 12.00 x 6.00 (356 x 305 x 152)	A14N12P	A14N12PP	12.25 x 10.25	311 x 260
A16N126	16.00 x 12.00 x 6.00 (406 x 305 x 152)	A16N12P	A16N12PP	14.25 x 10.25	362 x 260
A20N126	20.00 x 12.00 x 6.00 (508 x 305 x 152)	A20N12P	A20N12PP	18.25 x 10.25	464 x 260
A12N128	12.00 x 12.00 x 8.00 (305 x 305 x 203)	A12N12P	A12N12PP	10.25 x 10.25	260 x 260
A14N128	14.00 x 12.00 x 8.00 (356 x 305 x 203)	A14N12P	A14N12PP	12.25 x 10.25	311 x 260

Purchase panels separately.

Subject to change without notice
PH 763 422 2211 • FX 763 422 2600 • www.hoffmanonline.com
© 2007 Hoffman Enclosures Inc.

Small Type I Enclosures

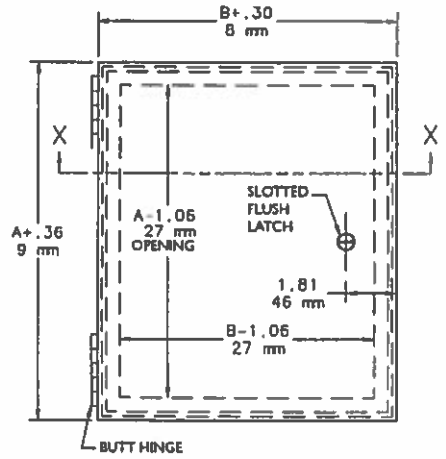

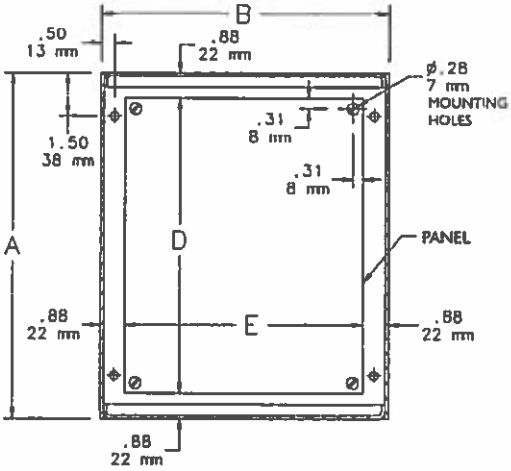

SECTION Y-Y

NOTE: 1. Panels are 14 gauge steel.
2. Panel screws have #10-32 threads.

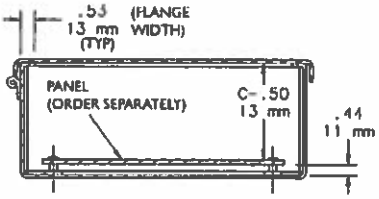

SECTION X-X

Optional Latches

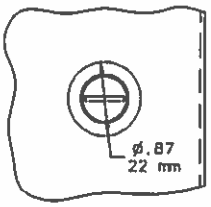

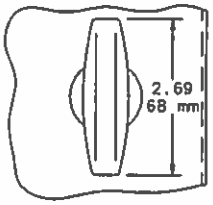

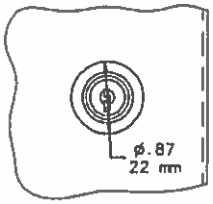

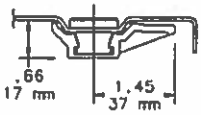

Standard Slotted Flush Latch

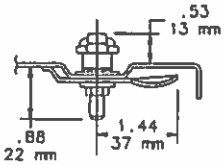

"T" Handle Latch Kit AL7A

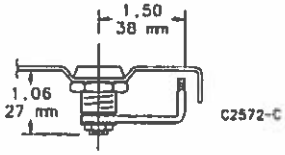

Cylinder Lock Kit AL12AR

 © 2007 Hoffman Enclosures Inc.